Transpot Light
FD-600
Product user manual



Contents

1. Safety Instruction 3
2. Function Menu.....4
3. Function Operation 5
4. Channel Function 6
5. Pixel Control 9
6. Product Dimension Drawing.....10
7. Technical Parameter 11

Safety Notes

Note : To ensure reasonable consistency of operation, please read this instruction carefully. Any damages caused by the non-observance of this manual or any unauthorized modification to this product are not be subject to warranty .

1. This product belongs to high temperature products. Do not touch the lamp body when working, carefully scalds!

2. Maintain a 50CM space at the back of the lamp body for dissipate heat.

3. When installing/replacing the lamp tube, turn off the lamp power!

4. This lamp is used for indoor lighting, not waterproof ! When lamp works, lamp tube at high temperature.

5. Make sure the voltage and frequency of power supply match the power require of this devise.

6. Please do not operate the equipment in the condition of wire damage or wear.

7. Do not remove any part of the equipment during the use of lamps.

8.Any unauthorized modification to this product are not be subject to warranty .

Function Menu

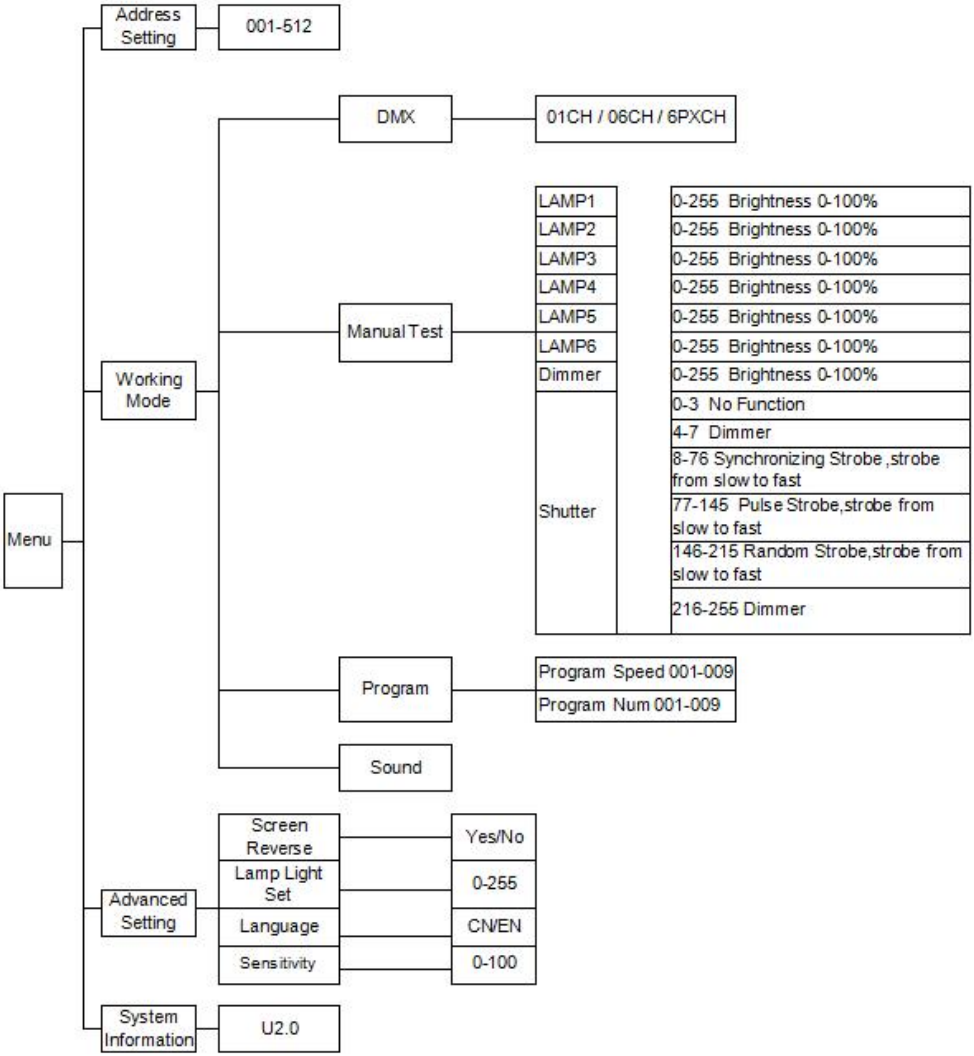

Function Operation

Keys diagram

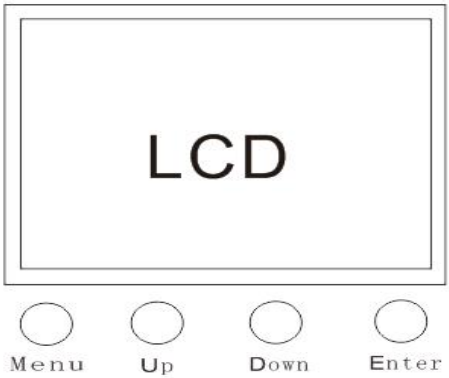

2.1 built-in program Automatic function

1. Select the working mode menu.
2. Select automatic mode.
3.Choose one of nine programs.
4. Setting program speed.

2.2 manual mode function

The manual mode function is consistent with the Pixel control 7CH channel but in manual mode DMX address is not working in that condition . The seven submenus correspond to seven functions .

2.3 Sound control function

1. Select the working mode menu.
2. Select automatic mode. Because sound control is based on the automatic program, so you need to choose the automatic program before you turn on the sound control .
3.Choose one of nine programs .
4. Select the working mode menu.
5. Select sound control mode.

6. Set the sound control sensitivity. 0-15 no function ;16-255 sound control more and more sensitive .

Channel Function

1CH DMX general function

1. Select the working mode menu.
2. Select DMX mode.
3. Set to 1 channel mode.
4. Exit the working mode menu, select the DMX menu, and set the DMX menu address.
The DMX address can be set to 001.

Channel	Function	From	To	Feature
1	Dimmer	0		No function
		1	255	Master dimmer

6CH DMX general function

1. Select the working mode menu.
2. Select DMX mode.
3. Set to 6 channel mode.
4. Exit the working mode menu, select the DMX menu, and set the DMX menu address.
The DMX address can be set to 001.

Channel	Function	From	To	Feature
1	Dimmer	0	255	Brightness 1—100%
2	Strobe	0	3	No function
		4	7	Dimmer
		8	76	Synchronizing strobe; Strobe from slow to fast
		77	145	Pulse strobe ; Strobe from slow to fast
		146	215	Random strobe ; strobe from slow to fast
		216	255	Dimmer
3	Auto run-1	0	15	No function
		16	31	Program 1
		32	47	Program 2
		48	63	Program3
		64	79	Program4
		80	95	Program5
		96	111	Program6
		112	127	Program7
		128	143	Program8
		144	159	Program9
		160	175	Program10
		176	191	Program11
		192	207	Program12
		208	223	Program13
		224	239	Program14
		240	255	Program15

4	Auto run-2	0	15	No function
		16	31	Program 16
		32	47	Program 17
		48	63	Program18
		64	79	Program19
		80	95	Program20
		96	111	Program21
		112	127	Program22
		128	143	Program23
		144	159	Program24
		160	175	Program25
		176	191	Program26
		192	207	Program27
		208	223	Program28
		224	239	Program29
		240	255	Program30
5	Speed	0		No function
		1	255	Program speed from slow to fast
6	Sound	0		No function
		1	255	Sensitivity increases gradually

6PXCH DMX Pixel Control function

1. Select the working mode menu.
2. Select DMX mode.
3. Set to 6 channel mode.
4. Exit the working mode menu, select the DMX menu, and set the DMX menu address.

The DMX address can be set to 001.

Channel	Function	From	To	Feature
1	Lamp1	0		No function
		1	255	Brightness 1—100%
2	Lamp2	0		No function
		1	255	Brightness 1—100%
3	Lamp3	0		No function
		1	255	Brightness 1—100%
4	Lamp4	0		No function
		1	255	Brightness 1—100%
5	Lamp5	0		No function
		1	255	Brightness 1—100%
6	Lamp6	0		No function
		1	255	Brightness 1—100%

DMX Pixel control lamp bead Diagram

Lamp Diagram ：

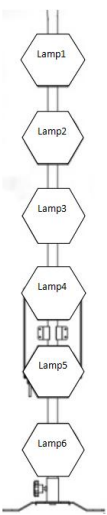

Product Dimension Drawing

As below ：

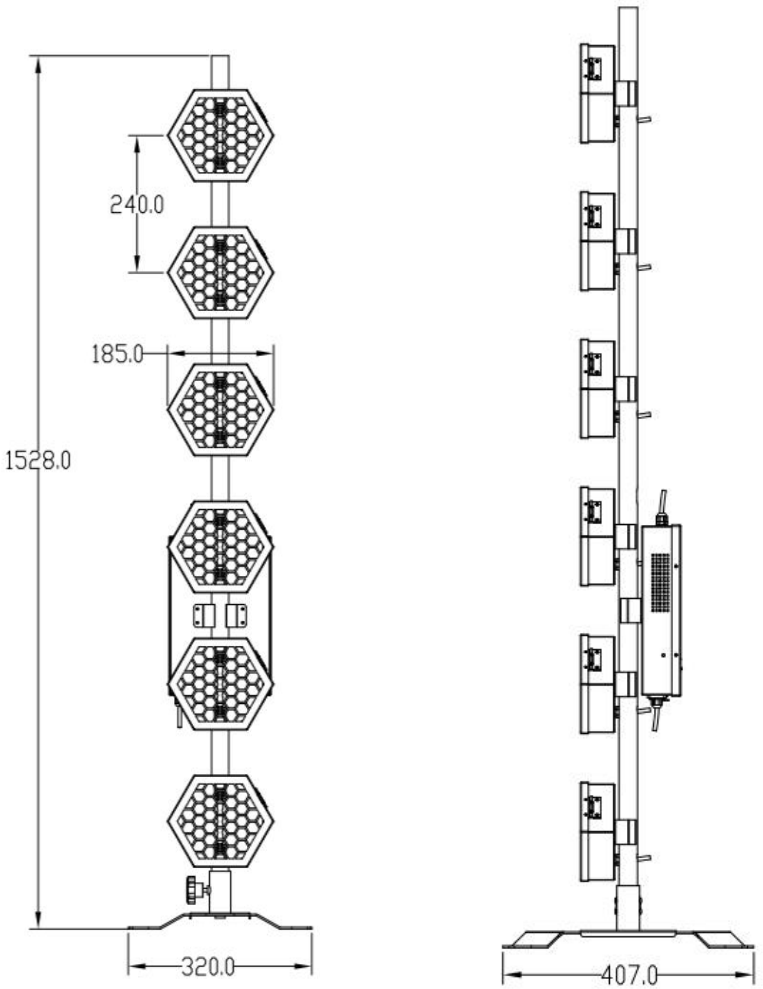

Technical Parameter Diagram

Technical Parameter Diagram ：

Item	Technical Parameter
Work voltage	**230V50/60HZ**
Power consumption	**1800W**
Light source	**6×300W Halogen lamps**
DMX channel	**1CH/6CH /6PXCH**
Control Mode	**Auto-run , Sound control ,DMX control**
Color temperature	**2900K**
Dimension	**153×320×410MM**
Wight	**7.7Kg**
Packing	**Carton/2pcs , Flight case/4pcs**