Tran-spot Light
FD-60RGB
Product user manual

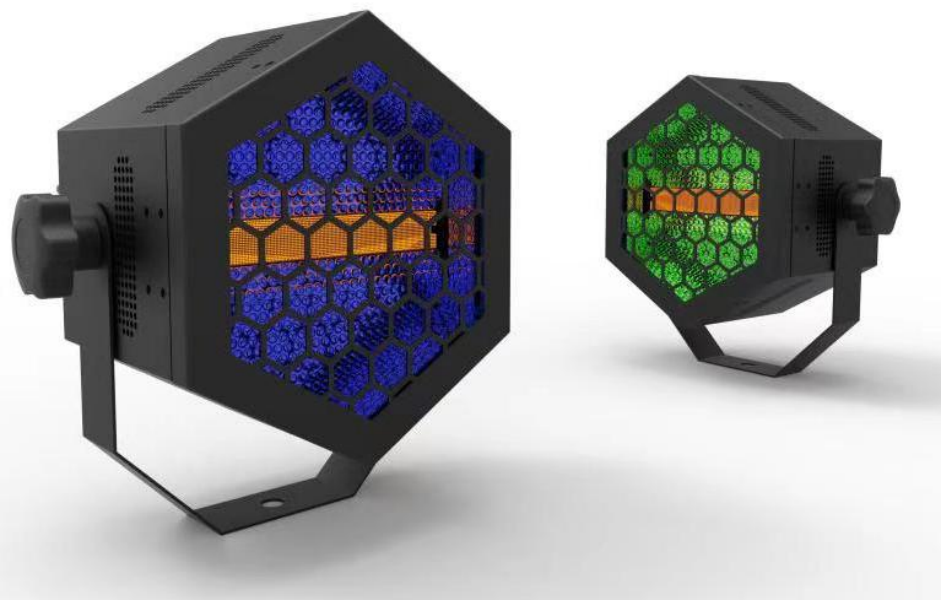

Contents

1. Safety Instruction 3
2. Function Menu.....4
3. Function Operation 5
4. Channel Function 7
5. Product Dimension Drawing.....9
6. Technical Parameter 9

Safety Notes

Note : To ensure reasonable consistency of operation, please read this instruction carefully. Any damages caused by the non-observance of this manual or any unauthorized modification to this product are not be subject to warranty .

1. This product belongs to high temperature products. Do not touch the lamp body when working, carefully scalds!

2. Maintain a 50CM space at the back of the lamp body for dissipate heat.

3. When installing/replacing the lamp tube, turn off the lamp power!

4. This lamp is used for indoor lighting, not waterproof ! When lamp works, lamp tube at high temperature.

5. Make sure the voltage and frequency of power supply match the power require of this devise.

6. Please do not operate the equipment in the condition of wire damage or wear.

7. Do not remove any part of the equipment during the use of lamps.

8.Any unauthorized modification to this product are not be subject to warranty .

Function Menu

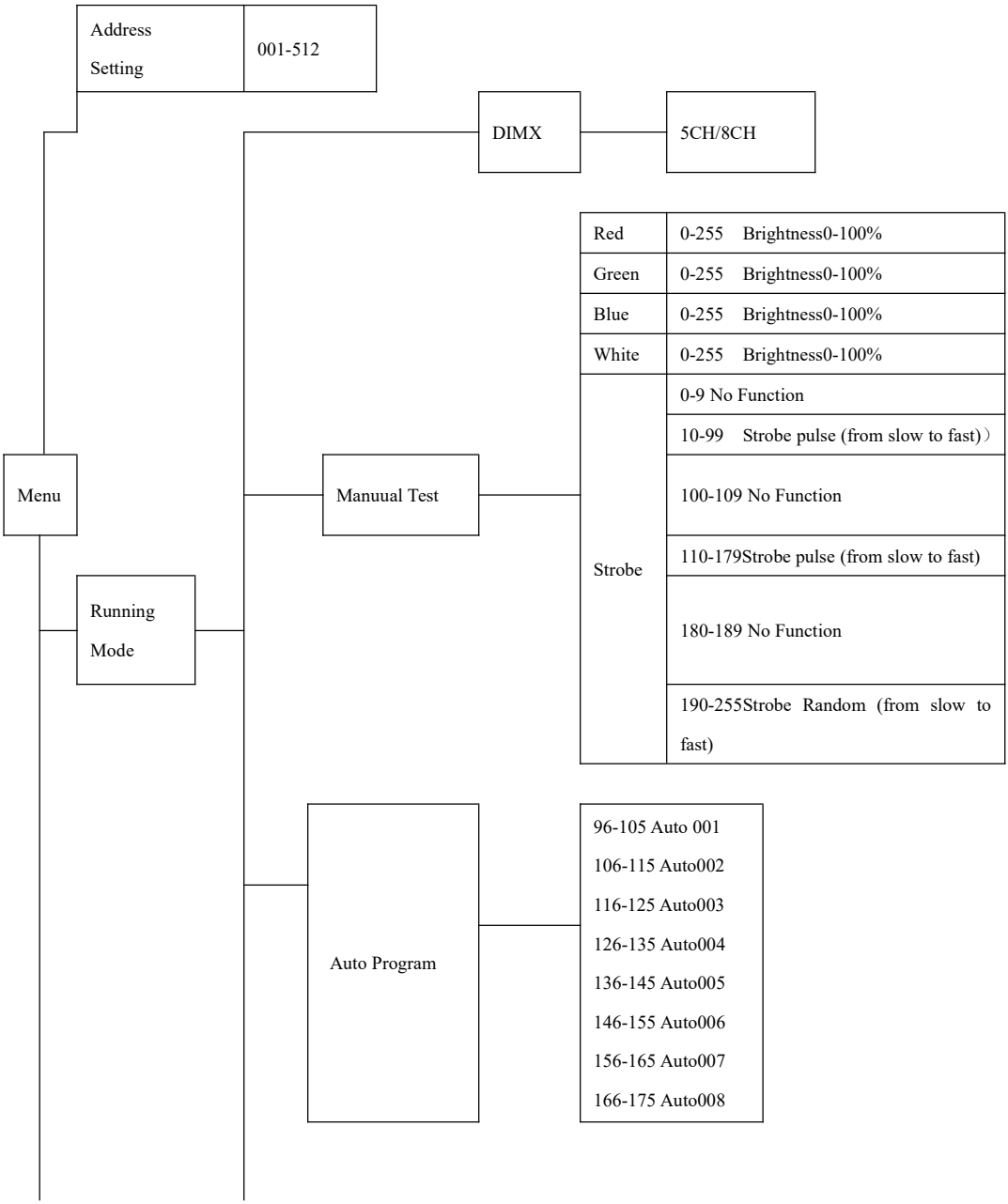

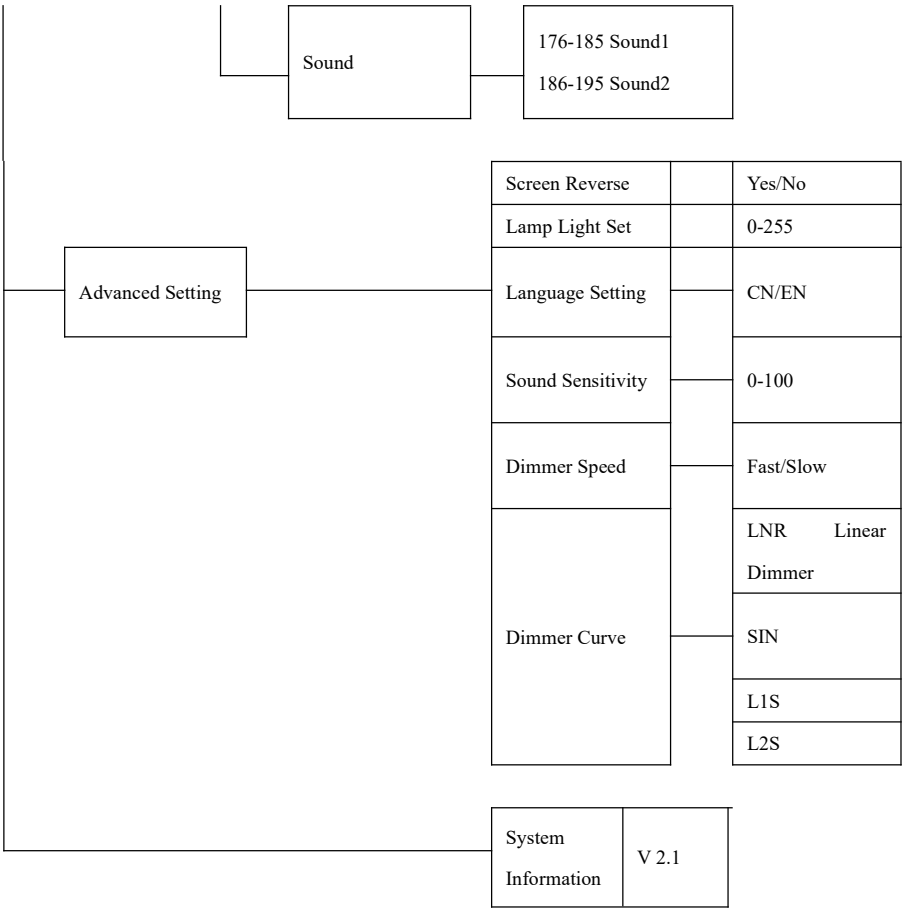

Function Operation

Keys diagram

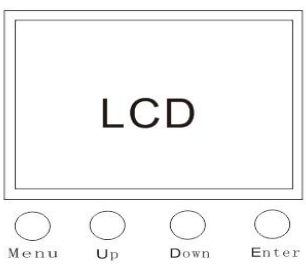

2.1 built-in program Automatic function

1. Select the working mode menu.
2. Select automatic mode.
3.Choose one of eight programs.
4. Setting program speed.

2.2 manual mode function

The manual mode function is consistent with the 8CH channel but in manual mode DMX address is not working in that condition.The operator only needs to operate according to the 8CH channel.

2.3 Sound control function

1. Select the working mode menu.
2. Select automatic mode. Because sound control is based on the automatic program, so you need to choose the automatic program before you turn on the sound control .
3.Choose one of two programs .
4. Select the working mode menu.
5. Select sound control mode.
6. Set the sound control sensitivity. From 0 to 255 sound control will more and more sensitive

Channel Function

5CH DMX general function

1. Select the working mode menu.
2. Select DMX mode.
3. Set to 5 channel mode.
4. Exit the working mode menu, select the DMX menu, and set the DMX menu address.The DMX address can be set to 001.

CH	Value	function
1	0-255	Dimmer 0-100%
2	0-255	Red 0-100%
3	0-255	Green 0-100%
4	0-255	Blue 0-100%
5	0-255	White 0-100%

8CH DMX general function

1. Select the working mode menu.
2. Select DMX mode.
3. Set to 8 channel mode.
4. Exit the working mode menu, select the DMX menu, and set the DMX menu address.

The DMX address can be set to 001.

CH	from	to	function
1	0	255	Dimmer 0-100%
2	0	255	Red 0-100%
3	0	255	Green 0-100%

4	0	255	Blue 0-100%
5	0	255	White 0-100%
6	0	9	No function
	10	99	Strobe in the line (from slow to fast)
	100	109	No function
	110	179	Strobe pulse (from slow to fast)
	180	189	No function
	190	255	Strobe Random (from slow to fast)
7	0	5	No function
	6	15	RED 100%/GREEN UP /BLUE 0%
	16	25	RED DOWN/ GREEN 100%/ BLUE 0%
	26	35	RED 0%GREEN 100%BLUE UP
	36	45	RED 0%GREEN DOWN /BLUE 100%
	46	55	RED UP /GREEN 0%/ BLUE 100%
	56	65	RED 100%/GREEN 0%/BLUE DOWN
	66	75	RED 100%/GREEN UP/ BLUE UP
	76	85	RED DOWN / GREEN DOWN/ BLUE 100%
	86	95	RED 100%/ GREEN 100%BLUE 100%WHITE 100%
	96	105	Auto 1
	106	115	Auto 2
	116	125	Auto 3
	126	135	Auto 4
	136	145	Auto 5
	146	155	Auto 6
	156	165	Auto 7
	166	175	Auto 8
	176	185	Sound 01
	186	195	Sound 02
	195	254	No function
	255	255	Keep 5 seconds the system reset
8	0	255	Sound Sensitivity /Auto Speed(from slow to fast）

Product Dimension Drawing

As below ：

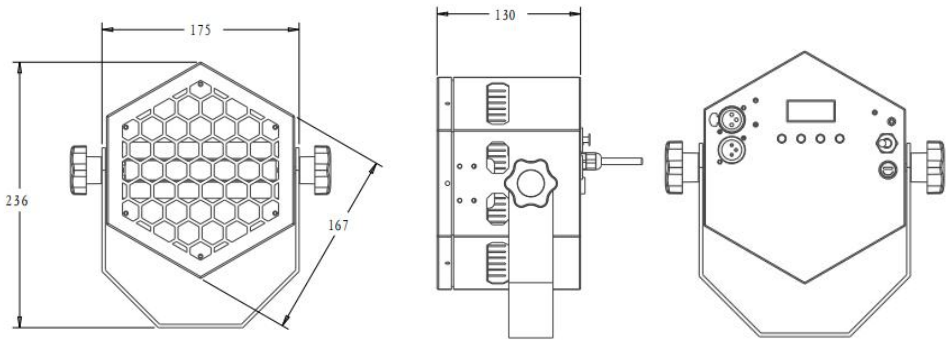

Technical Parameter Diagram

Technical Parameter Diagram ：

Item	Technical Parameter
Work voltage	**110 ~ 240V50/60HZ**
Power consumption	**80W**
Light source	**1×60W +24×0.5W RGBW**
DMX channel	**5CH /8CH**
Control Mode	**Auto-run , Sound control ,DMX control**
Color temperature	**2200K+RGB**
Dimension	**236×175×130MM**
Wight	**2.7Kg**
Packing	**Carton/6pcs**